HiluX

IP44

HiluX D1

LED downlight 12 V with D1 driver

Supply voltage	**12 V DC (SELV)**
Power	**2.8 W**
Luminous flux	**250 lm**
Colour temperature	**2700 K**
Colour rendering	**CRI 97**
Beam angle	**60°**
IP rating	**IP44**
Protection class	**III (SELV)**
Dimmable	**Via D1 driver**
Dimensions	**ø68 × 13 mm**
Recess depth	**10 mm**
Cut-out	**ø56 mm**
Energy class	**F**
Min. distance, light direction	**0.1 m**
Driver input	**220-230 V AC, 50/60 Hz**
Driver output	**12 V DC, max. 1 A, max. 12 W**
Driver	**II, IP20, dry rooms only**
Max. per driver	**4 × D1**

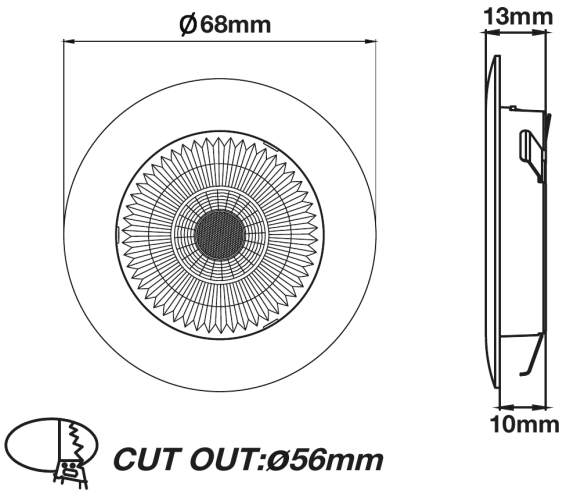

1

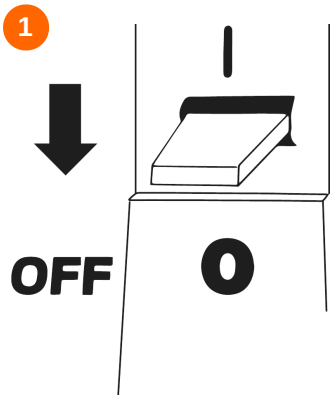

2

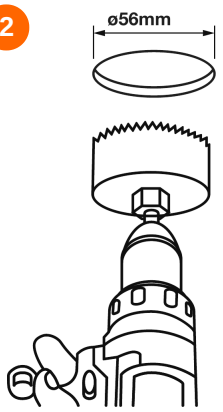

3

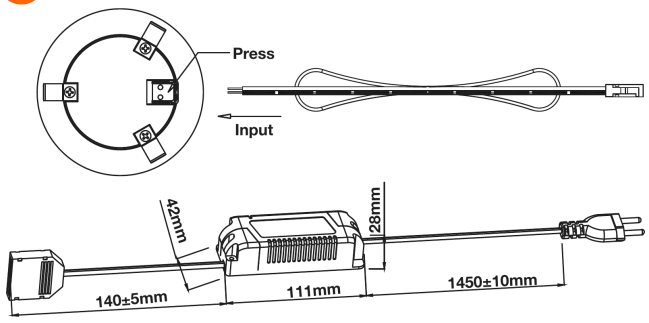

4

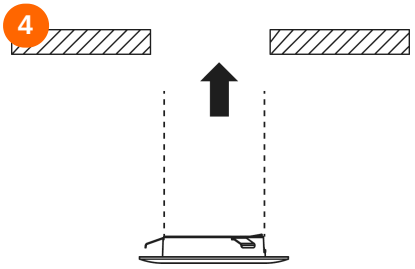

5



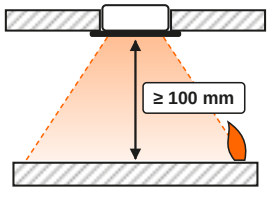

Min. distance to flammable materials in front of the light

The D1 downlight operates at 12 V DC safety extra-low voltage (SELV). Use it only with the HiluX D1 driver. Never connect the downlight directly to mains voltage.

HiluX

IP44

EN English

Safety

- The D1 downlight operates at 12 V DC safety extra-low voltage (SELV). Use it only with the HiluX D1 driver. Never connect the downlight directly to mains voltage.
- Connect max. 4 D1 downlights (max. 12 W) to one D1 driver.
- The downlight is IP44 and may be used in damp rooms. The driver is IP20 and must only be used indoors in dry rooms. Do not cover the driver and keep it away from water and heat.
- Keep a minimum distance of 0.1 m between the front of the downlight and flammable materials in the direction of the light.
- The supply cord of the driver cannot be replaced. If the cord is damaged, the driver must be discarded.
- The driver is connected to a socket outlet with its plug. Connection to the fixed installation must only be carried out by an authorised electrician.
- Do not use the product if the luminaire, driver or cables are damaged.
- Do not modify the product.

Installation

1. Pull the plug of the driver out of the socket outlet (fig. 1).
2. Cut a hole of ø56 mm (fig. 2). Recess depth 10 mm.
3. Press the release on the terminal of the downlight, insert the 12 V cable and release. Plug the cable into the distribution box of the driver (fig. 3).
4. Push the downlight into the hole until it sits flush (fig. 4 and 5).
5. Plug the driver into the socket outlet.

Use and dimming

The D1 driver can be dimmed with a trailing-edge (phase-cut) dimmer designed for LED loads on its 230 V supply side. Observe the minimum load of the dimmer. An unsuitable dimmer can cause flicker.

Cleaning and maintenance

Switch off the mains supply and let the luminaire cool down before cleaning. Clean with a dry, soft cloth. Do not use solvents, abrasives or water jets.

Light source and driver

This product contains a light source of energy efficiency class F. The LED light source may only be replaced by a qualified person. Use only original HiluX spare parts, available from Light Solutions ApS. The D1 driver can be replaced by the user: pull out the plug and disconnect the downlights.

Disposal

Do not dispose of the product with household waste. Take it to a collection point for waste electrical and electronic equipment.

Conformity

The product complies with the applicable EU legislation. The EU declaration of conformity is available from Light Solutions ApS on request. Batch: see the date code on the product. **Keep these instructions.**